BEFORE PROCEEDING WITH COMPLETE UNPACKING AND SETUP,
CONSULT UNPACKING AND INSPECTION INSTRUCTIONS

model 1620
MUSIC MIXER

UREI Incorporated
8400 BALBOA BOULEVARD
NORTHRIDGE, CA. 91325-4100 U.S.A.
PHONE: (818) 895-UREI (895-8734)
FAX: (818) 891-5475

Printed in USA
© Copyright 1982, 1989 UREI Inc.

JBL PROFESSIONAL

CUSTOMER SERVICE

8370 BALBOA BOULEVARD
NORTHRIDGE, CA 91329, U.S.A.
PHONE (818) 893-8411
FAX (818) 891-9619

TABLE OF CONTENTS

		PAGE
SECTION I. INTRODUCTION		
1.1	DESCRIPTION	1
1.2	SPECIFICATIONS	2
1.3	ACCESSORIES	5
SECTION II. INSPECTION AND INSTALLATION		
2.1	UNPACKING AND INSPECTION	6
2.2	ENVIRONMENTAL CONSIDERATIONS	6
2.3	POWERING	6
2.4	LINE VOLTAGE SWITCH	7
2.5	EXTERNAL CONNECTIONS	7
2.5.1	INPUT CONNECTIONS	7
2.5.1.1	PHONO 1 & 2	7
2.5.1.2	MICROPHONE INPUT	8
2.5.1.3	AUXILIARY LINE LEVEL INPUTS	8
2.5.2	OUTPUT CONNECTIONS	8
2.5.2.1	HOUSE OUTPUT	8
2.5.2.2	BOOTH OUTPUT	9
2.5.2.3	MONO OUTPUT	9
2.5.2.4	TAPE OUTPUTS	9
2.5.2.5	EFFECTS LOOP	9
2.5.2.6	HEADPHONE MONITOR	10
2.6	IMPEDANCE AND TERMINATION	10
SECTION III OPERATING CONTROLS		
3.1	INPUTS	12
3.2	HEADPHONE	12
3.3	HOUSE, BOOTH AND TONE CONTROLS	12
SECTION IV OPTIONAL CONFIGURATIONS		
4.1	MICROPHONE GAIN ADJUSTMENT	13
4.2	PHONO INPUT ON AUX 1, 2 AND/OR 3	13
	FIGURE 4-1 MOTHERBOARD DETAIL	14
4.3	MICROPHONE INPUT ON AUX 1, 2 AND/OR 3	15
	FIGURE 4-2 REAR PANEL CIRCUIT BOARD	15
4.4	AUX 4 INPUT: BYPASSING MASTER GAIN CONTROLS	17
4.5	TONE CONTROL BYPASS	18
	FIGURE 4-3 TONE CONTROL BOARD	18
SECTION V MAINTENANCE		
5.1	GENERAL	19
5.2	REPAIRS AND WARRANTY	19

SECTION VI ILLUSTRATIONS

FIGURE 6-1	MIC PREAMP PART NO. 10-13853 SCHEMATIC	20
FIGURE 6-2	PHONO PREAMP PART NO. 10-13854 SCHEMATIC	21
FIGURE 6-3	1620 MUSIC MIXER SCHEMATIC	22
FIGURE 6-4	1620 MUSIC MIXER BLOCK DIAGRAM	23

SECTION
INTRODUCTION

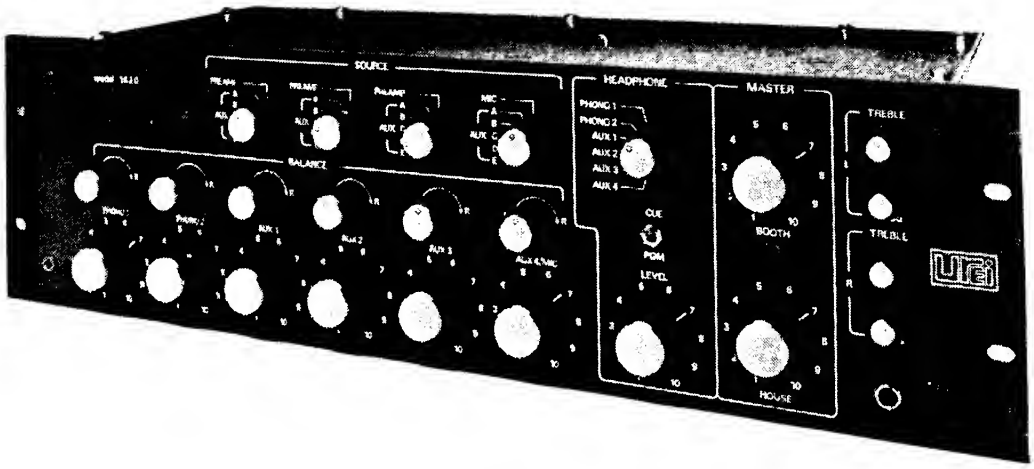

FIGURE 1-1. Model 1620 Front Panel

1.1 DESCRIPTION

The UREI Model 1620 Music Mixer is a multi-input stereo mixer which has been optimized for the heavy demands of fixed and mobile sound installations. The outstanding features and reliability of the Model 1620 make it useful in broadcast production, sound reinforcement, and other applications where high quality is essential.

The Model 1620 has six input positions, each with a level control and a balance control. In addition, the input positions labelled AUX 1 - AUX 4 have input source selector switches, allowing any of these four positions to control any of five auxiliary inputs (AUX A - E) or the output of an optional internal preamplifier associated with that input position only. AUX 4 input is supplied with a microphone preamplifier card, Part No. 10-13853, and the selector switch position is labelled MIC. If no preamplifier card is installed in input positions AUX 1, AUX 2 or AUX 3, the preamplifier input may be used with a line level source.

The output circuits of the Model 1620 are quite versatile. Separate outputs for house and booth amplifiers are provided, each with its own level control. Two separate tape outputs are provided for making recordings; and an effects loop allows connection of equalizers, limiters, expanders or other signal processing equipment.

A separate headphone circuit has its own selector switch, allowing its source to come from any of the six input controls (pre-fader) or from the program output; its level control feeds an internal headphone amplifier and front panel stereo 6.3 mm (1/4 in.) phone jack. For convenience in attaching lighting controllers, an isolated mono (L + R) output is provided on a rear panel jack; this output is not affected by any of the output level controls, so that lighting intensity will not be changed by overall level adjustments. Separate bass and treble controls for left and right channels affect the house, booth, headphone and mono outputs. The inflection points of these controls have been carefully selected for minimum midrange coloration and good adjustment range.

To further customize the 1620 Music Mixer for specific installations, qualified technicians may make simple internal modifications to defeat the tone controls and/or connect the standard mic input so that it does not appear on the tape outputs or effects loop and is not affected by the master gain or tone controls.

The Model 1620 has been designed for long life and reliability. All input and output level controls are quiet, smooth-acting conductive plastic. Modular construction assures minimum down time in case of problems -- all preamplifiers, selector switches, level and balance controls are on modular subassemblies which may be replaced in the field without soldering. Components are operated well within their ratings to assure reliability in continuous duty service.

1.2 SPECIFICATIONS

INPUTS	Six stereo inputs with individual balance and level controls.
Phono 1 & 2	RIAA-equalized stereo phono, with two Part No. 10-13854 preamplifier cards supplied as standard configuration.
Auxiliary 1 - 4	Switchable to any one of five line level sources or a preamplified low level source. Standard configuration: Aux 4 Input equipped with mono microphone preamplifier card, Part No. 10-13853.

	Optional configuration: Preamp source position accepts stereo phono preamplifier card, Part No. 10-13854, or mono microphone preamplifier card, Part No. 10-13853; Phono inputs 1 & 2 alternately will accept mic preamp card in place of standard phono preamp card.
Phono Inputs	
Input Impedance	47k ohms.
Gain	61 dB maximum @ 1 kHz.
Connector	RCA-type phono jack.
Microphone Input	
Input Impedance	For 150 ohm microphone, bridging.
Gain	60-80 dB, adjustable on card.
Noise	< -126 dB (ref. 0.775 V) equivalent input noise (15.7 kHz noise bandwidth).
Connector	XL-type three-pin female.
Auxiliary Inputs	
Input Impedance	10k ohm nominal.
Gain	20 dB maximum.
Connector	RCA-type phono jack.

OUTPUTS

House Output	Transformer isolated, symmetrical, floating.
Output Impedance	< 50 ohms.
Recommended Load	600 ohms or greater.
Frequency Response	±1 dB, 20 Hz - 20 kHz.
Distortion	< 0.1% THD, 20 Hz - 20 kHz @ +4 dBm.
Maximum Output	+25 dBm (13.78 V) into 600 ohms.
Connectors	XL-type three-pin male, RCA-type phono jack.
Booth Output	Same signal as House Output, separate front panel level control, unbalanced.
Output Impedance	600 ohms.
Recommended Load	600 ohms or greater.
Frequency Response	±1 dB, 20 Hz - 20 kHz.
Distortion	< 0.1% THD, 20 Hz - 20 kHz @ +4 dB.
Maximum Output	+20 dB (7.75 V) into 5k ohms.
Connector	RCA-type phono jack.

Headphone Output	
Source	Switchable to any input control (pre-fader) or to program output.
Output Impedance	< 50 ohms.
Recommended Load	200 ohms or greater.
Frequency Response	+0, -1.5 dB, 20 Hz - 20 kHz into 200 ohm load.
Distortion	< 0.3% THD, 20 Hz - 20 kHz @ +4 dB.
Maximum Output	+20 dB (7.75 V) into 200 ohms.
Connector	6.3 mm (1/4 in.) phone jack, three conductor, on front panel.
Mono Output	Summed left and right program signals, not affected by master gain, intended for lighting controllers, etc.
Output Impedance	5k ohms.
Recommended Load	5k ohms or greater.
Frequency Response	±1 dB, 20 Hz - 20 kHz.
Maximum Output	+14 dB (3.88 V) into 5k ohms.
Connector	6.3 mm (1/4 in.) phone jack, two conductor.
Tape Outputs (two)	
Output Impedance	600 ohms.
Recommended Load	5k ohms or greater.
Frequency Response	±1 dB, 20 Hz - 20 kHz.
Distortion	< 0.1% THD, 20 Hz - 20 kHz @ +4 dB.
Maximum Output	+20 dB (7.75 V) into 5k ohms.
Connectors	RCA-type phono jack.
Effects Loop Output	Same specifications as Tape Outputs.
Effects Loop Input	
Input Impedance	10k ohms.
Maximum Input Level	+23 dB (10.95 V).
Connector	RCA-type phono jack.
TONE CONTROLS	Affect program material from House, Booth, Headphone and Mono outputs; separate controls for left and right channels.
Treble	±10 dB @ 10 kHz.
Bass	±10 dB @ 50 Hz.
POWER REQUIREMENTS	100-125/200-250 V AC, 50/60 Hz, selectable on rear panel.
Consumption	20 W maximum.
Indicator	Red LED, front panel.
Fuse	Type 3AG Slow Blow, 1/4 A @ 115 V, 1/8 A @ 230 V.
Power Cord	3 wire U-ground, captive, approx. 1.5 m (5 ft.) long.

ENVIRONMENT	Operating: 0°C to +50°C (+32°F to +122°F). Storage: -20°C to +60°C (-4°F to +140°F).

PHYSICAL SPECIFICATIONS

Dimensions	
Front Panel	133 x 483 mm (5 1/4 x 19 in.) EIA rack mount.
Depth Behind Panel	203 mm (8 in.).
Finish	Panel is 3.2 mm (1/8 in.) black anodized, horizontally brushed aluminum. Chassis is cadmium-plated steel.
Net Weight	5.9 kg (13 lb).
Shipping Weight	6.8 kg (15 lb).

1.3 ACCESSORIES

Part No. 10-13853	Microphone Preamplifier.
Part No. 10-13854	Phono Preamplifier.

(Note: 1 ea 10-13853 and 2 ea 10-13854 are supplied in the 1620 Mixer; up to 3 additional preamplifiers may be installed.)

SECTION II
INSPECTION AND INSTALLATION

2.1 UNPACKING AND INSPECTION

Your Model 1620 was carefully packed at the factory, and the container was designed to protect the unit from rough handling. Nevertheless, we recommend careful examination of the shipping carton and its contents for any sign of physical damage which could have occurred in transit.

If damage is evident, do not destroy any of the packing material or the carton, and immediately notify the carrier of a possible claim for damage. Shipping claims must be made by the consignee.

The carton should contain:

Model 1620 Music Mixer.

UREI Instruction Manual (this book).

Two-part Warranty Card bearing the same serial number as the Model 1620 -- the serial number tag is on the rear panel of the mixer.

Rack mounting hardware.

2.2 ENVIRONMENTAL CONSIDERATIONS

The 1620 Mixer will operate satisfactorily over a range of ambient temperatures from 0°C to +50°C (+32°F to +122°F), and up to 80% non-condensing relative humidity.

If the system is installed in an equipment rack, console or desk with high heat producing equipment (such as power amplifiers), adequate ventilation should be provided in order to assure longest component life. Also, while circuitry susceptible to hum pickup is sufficiently shielded from moderate electromagnetic fields, installation should be planned to avoid mounting the system immediately adjacent to large power transformers, motors, etc.

2.3 POWERING

The 1620 may be operated from either 100-125 V AC or 200-250 V AC mains (50-60 Hz, single phase). As indicated below, the nominal line voltage may be selected with a rear panel swich. BE SURE TO VERIFY BOTH THE ACTUAL LINE VOLTAGE AND THE SETTING OF THE VOLTAGE SELECTOR SWITCH BEFORE CONNECTING THE 1620 TO THE MAINS.

To comply with most electrical codes, the 1620 is supplied with a three wire captive power cord, the grounding pin of which is connected to the chassis. In some installations, this may create ground loop problems. Ground loops can result in hum and buzz if a significant potential difference exists between the AC conduit ground and the grounded metal enclosure in which the chassis is installed. If hum is experienced, one may check for the possibility of ground loops by using a three-prong to two-prong AC adapter between the power cord and the mains supply, ungrounding the AC plug temporarily. This ungrounds the Model 1620, and may cure the hum or buzz, but is not a substitute for proper system grounding. Be aware that unless the Model 1620 Music Mixer is AC grounded, a safety hazard can exist. UREI accepts no responsibility for legal actions or for direct, incidental or consequential damages that may result from violation of any electrical codes.

2.4 LINE VOLTAGE SWITCH

Unless a tag on the line cord specifies otherwise, the Model 1620 was shipped ready for operation with nominal 115 V AC power mains. To change this for nominal 230 V AC operation, slide the VOLTAGE SELECTOR switch on the rear panel to the 230 position. The voltage is visible in a window next to the switch slot. Be sure to change the type 3AG fuse to the correct value: 1/8 ampere slow blow for 230 V operation or 1/4 ampere slow blow for 115 V operation. A small screwdriver should be used to move the recessed switch.

2.5 EXTERNAL CONNECTIONS

NOTE: See also the Schematic and Block Diagrams in Section VI for further details.

Input and output signal wires should be shielded cable, connected in accordance with standard wiring practice.

2.5.1 Input Connections

2.5.1.1 Phono 1 & 2:

The first two inputs of the Model 1620, as supplied from the factory, are equipped with phono preamplifier cards, Part No. 10-13854. Input is through standard RCA-type phono connectors. Most turntables have a separate ground wire. A ground terminal for this connection is located on the rear panel, adjacent to the input jacks for Phono 1 and 2.

2.5.1.2 Microphone Input:

The AUX 4 preamplifier position is supplied from the factory with a microphone preamplifier, Part No. 10-13853, installed. Connection is made via a standard XL-type socket. The wiring convention is:

Pin 1 -- Shield
Pin 2 -- Common
Pin 3 -- Hot

The microphone to be used should be a low impedance type. If the microphone is unbalanced, the Common and Shield pins in the cable connector should be connected together.

2.5.1.3 Auxiliary Line Level Inputs:

Five sets of auxiliary line level inputs are available on the Model 1620, labelled AUX A, B, C, D and E. Connection on the rear panel is through RCA-type phono jacks. These inputs may be accessed by any of the selector switches asociated with the front panel input level controls labelled AUX 1 - AUX 4. Additionally, the inputs on the back panel labelled AUX 1-PREAMP through AUX 3-PREAMP may be used as line level inputs as supplied from the factory, with no preamplifier cards installed and jumper wires on the mother board bypassing the internal preamplifier connectors.

2.5.2 Output Connections

2.5.2.1 House Output:

The main or house output is available on the rear panel through three pin male XL-type connectors and RCA-type phono connectors. The XL connectors are transformer balanced and capable of +25 dBm output (600 ohm load). The RCA-type phono jacks are fed from the primary of the output transformer, are unbalanced, and will provide +20 dBm output (600 ohm load). Pin 3 of the XL connector is the high side (or +), Pin 2 is the low side (or -), and Pin 1 is Shield. For unbalanced operation using the XL connectors, connect Pins 1 and 2 together.

If there is a long cable run from the output of the Model 1620 to the input of the power amplifier, equalizer, crossover network or other connected device, we recommend connecting a 620 ohm 1/2 watt resistor across the line at the end of the cable which is hooked up to the input of that device. This will establish the impedance of the line at approximately 600 ohms and will make the line less susceptible to induced noise.

2.5.2.2 Booth Output:

The booth output is the same program signal as the house output, but it is fed by a separate front panel level control for those installations which have monitor speakers in the control booth. Connection is made on the rear panel via RCA-type phono jacks.

If the installation is to include booth monitor speakers and a booth microphone, care should be taken to turn down the booth output before turning up the microphone input to prevent acoustic feedback. Similarly, do not turn up the booth output until the booth microphone has been turned down. This will prevent embarrassment as well as possible equipment damage.

2.5.2.3 Mono Output:

A mix of the left and right signal busses is taken out to a 6.3 mm (1/4 in.) two-conductor phone jack on the rear panel. This output is intended to be a convenient feed for lighting controllers, etc. While it is possible to take program audio for other purposes from this jack (for restroom speakers, dressing rooms, bar areas, etc.), it should be remembered that this output is not affected by the house and booth output level controls and, therefore, a separate level control should be provided.

2.5.2.4 Tape Outputs:

Two parallel sets of RCA-type phono jacks provide convenient means for connecting to tape recorders. These outputs are not affected by the tone controls, the output level controls, or any device connected to the effects loop (see below).

2.5.2.5 Effects Loop:

The effects loop is a patch point into the signal path at the same point as the tape outputs. The Loop Out and Loop In connectors are RCA-type phono jacks. External factory installed jumpers connect them together.

To use the effects loop, the jumpers must be removed. Connection is then made from the effects loop output to the input of the external processing device and from the output of that device to the effects loop input. Devices inserted in the effects loop should have unity nominal gain to preserve best possible signal to noise ratio.

2.5.2.6 Headphone Monitor:

The headphone monitor output appears on a 6.3 mm (1/4 in.) three-conductor stereo phone jack on the front panel. The minimum recommended impedance of the headphones is 200 ohms per side.

2.6 IMPEDANCE AND TERMINATION

Audio engineering had its roots in the telephone industry, and "600 ohm circuits" (together with their predecessors, "500 ohm circuits") are carryovers from telephone transmission practices. Long audio transmission lines, like their video counterparts, must be properly sourced from and terminated in equipment which matches their characteristic impedance if optimum frequency response and noise rejection are to be achieved.

However, transmission line theory and techniques are not only unnecessary but impractical within modern recording studios, broadcast studios and other local audio systems where transmission circuits are seldom more than several hundred feet in length. The advent of negative feedback circuitry and solid-state electronics has spawned modern audio amplifiers and other signal processing devices having source impedances of only a few ohms. They are essentially indifferent to load impedances and, by varying their output current inversely to changes in load impedance, maintain the same output voltage into any load impedance above a rated minimum, with no change in frequency response.

Modern audio systems, therefore, utilize amplifiers and other active devices which have very low output impedances and high (10k to 50k) input impedances. These products may thus be cascaded (operated in series), or many inputs may be connected to a single output of a preceding device, without regard to impedance "matching." Switching, patching, etc. is simplified because "double loads" and "unterminated" bugaboos are essentially eliminated. "Floating" (ungrounded) transformer outputs minimize ground loop problems, and differential transformerless circuitry (or input transformers) minimize common mode noise or interference which may be induced into the interconnecting wires or cables.

Where audio must be transmitted through cables or wire pairs of more than 100 metres or so (several hundred feet) in length, however, transmission line termination practices should still be observed.

The Model 1620's microphone input is an active balanced type, and is designed for use with a 150 ohm microphone. The line and effects loop inputs are unbalanced (one side grounded) and have a 10k ohm impedance. This makes these inputs suitable for use with any nominal source impedance, low or high. A source termination resistor will only be required when the 1620 line inputs are connected to a source which requires a low impedance termination (such as a 600-ohm transmission line or older vacuum-tube type equipment).

SECTION III
OPERATING CONTROLS

3.1 INPUTS

The Model 1620 has six input positions, each with a level control and a balance control. In addition, the input positions labelled AUX 1 - AUX 4 have input source selector switches, allowing any of these four positions to control any of five auxiliary inputs (AUX A - E) or the output of an optional internal preamplifier associated with that input position only. AUX 4 input is supplied with a microphone preamplifier card, Part No. 10-13853, and the selector switch position is labelled MIC. If no preamplifier card is installed in input positions AUX 1, AUX 2 or AUX 3, the preamplifier input may be used with a line level source.

3.2 HEADPHONE

The headphone circuit is designed as a cue and monitoring circuit. With the CUE/PGM switch in the PGM position, the program signal is fed to the headphones. With the switch in the CUE position, the signal feed is taken from before the individual input level controls. A six position selector switch determines which input will be heard. When cueing, be certain that the level control for that input is completely off, to avoid cueing through the house system.

3.3 HOUSE, BOOTH AND TONE CONTROLS

The house master affects the level of the house output, and the booth master affects the level of the booth output. The tone controls are separate for left and right channels and are shelving types, with a nominal cut or boost of 10 dB maximum at 50 Hz and 10 kHz.

SECTION IV
OPTIONAL CONFIGURATIONS

WARNING: BE CERTAIN THAT THE POWER CORD IS DISCONNECTED FROM THE ELECTRICAL MAINS BEFORE ATTEMPTING ANY OF THE FOLLOWING RECONFIGURATIONS.

4.1 MICROPHONE GAIN ADJUSTMENT

As supplied, the microphone preamplifier card, Part No. 10-13853, is set for 67 dB of gain, which should be adequate for most installations. If necessary, the gain may be changed with the trim potentiometer on the top edge of the card. The range of adjustment is 20 dB. Set to minimum (CCW position), the gain is 60 dB; set to maximum (CW position), the gain is 80 dB.

The potentiometer may be accessed by removing the seven screws on the top of the 1620, then removing the top cover. Be sure to replace all seven screws when reinstalling the cover.

4.2 PHONO INPUT ON AUX 1, 2, AND/OR 3

Auxiliary inputs 1, 2 and 3 may be optionally equipped with Part No. 10-13854 phono preamplifier cards. To install these cards:

1) Remove the seven screws fastening the top cover of the 1620 to the chassis, and remove the cover.

2) Locate the two bare wire jumpers to the left of the connector on the mother board into which the new preamplifier card will be installed. The connectors and jumpers are identified in Figure 4-1. These jumpers allow AUX INPUTS 1 - 3 to be used as line inputs when no preamplifier is installed, and must be removed to activate the preamplifier. The jumpers may be clipped off close to the motherboard with a wire cutter.

3) Install Part No. 10-13854 preamplifier cards in the required locations on the mother board. Note the orientation of the card and make certain that the card correctly mates with the connector on the mother board.

4) Reinstall the top cover, using all seven screws.

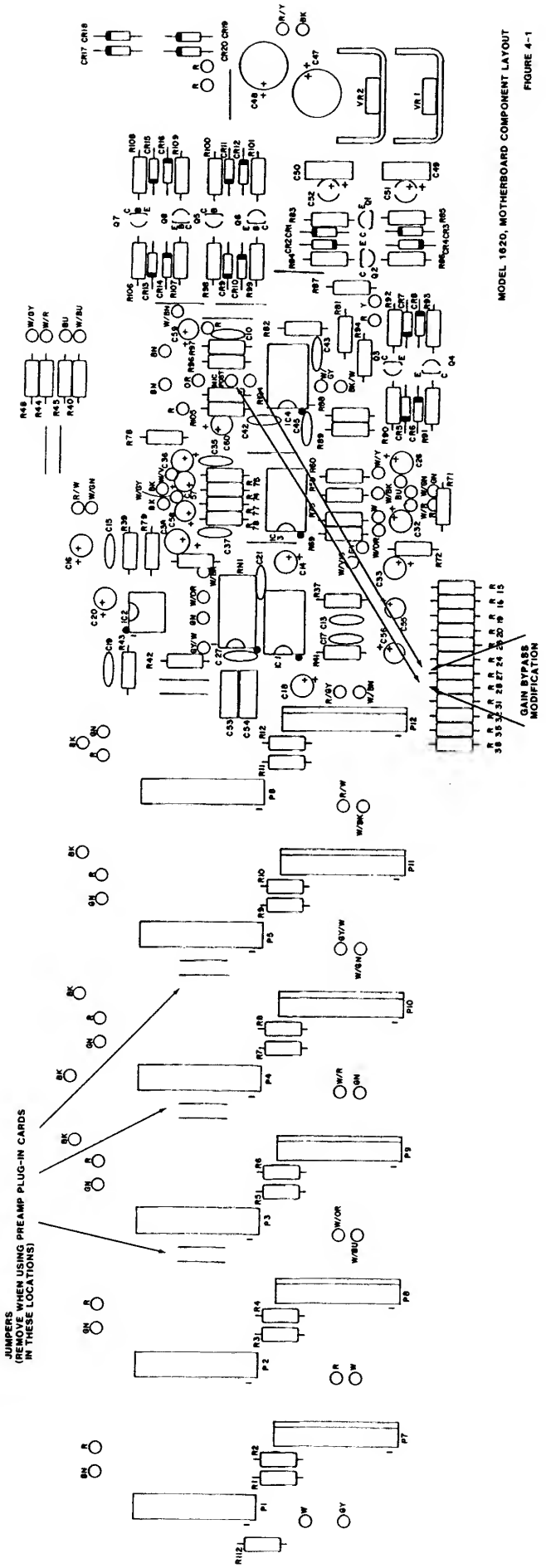

FIGURE 4-1. Motherboard Component Layout

4.3 MICROPHONE INPUT ON AUX 1, 2, AND/OR 3

Auxiliary inputs 1, 2 and 3 may be optionally equipped with Part No. 10-13853 microphone preamplifier cards and XL-type connectors.

NOTE: THE FOLLOWING MODIFICATIONS INVOLVE SOLDERING IN THE 1620 CHASSIS AND SHOULD ONLY BE PERFORMED BY QUALIFIED TECHNICIANS. IMPROPER INSTALLATION MAY RESULT IN VOIDING THE UREI WARRANTY.

To install a connector and preamplifier card:

1) Remove the seven screws fastening the top cover of the 1620 to the chassis, and remove the cover.

2) Remove the plug on the rear panel covering the hole which has been designated AUX 1/MIC, AUX 2/MIC or AUX 3/MIC, corresponding to the location chosen for the preamplifier card.

3) Install an XL-type 3 pin female connector in the hole.

4) Connect a short wire from Pin 3 of the XL connector to the center pin of the left channel RCA-type connector for the designated location. See Figure 4-2 for the location of the RCA-type connectors on the printed circuit board on the rear panel.

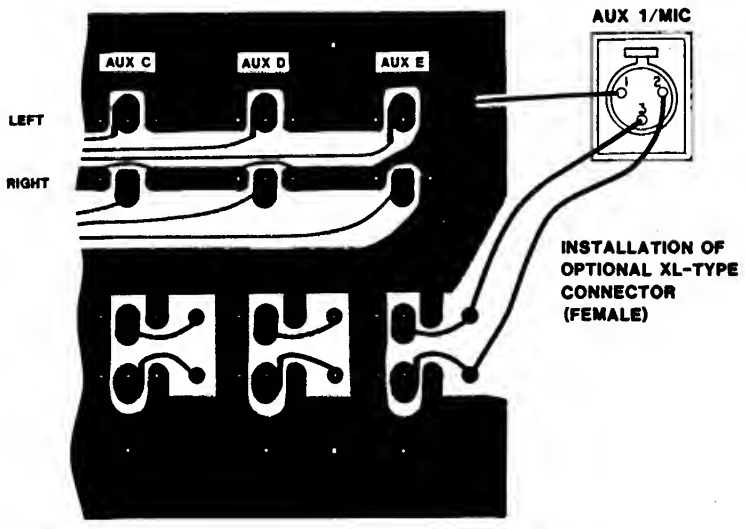

FIGURE 4-2. Rear Panel Circuit Board

5) Similarly, connect a short wire from Pin 2 of the XL connector to the center pin of the appropriate right channel RCA-type connector.

6) Connect a short wire from Pin 1 of the XL connector to the ground plane of the rear panel circuit board. Refer to Figure 4-2.

   Note: If desired, the RCA-type jacks can be used instead of an XL-type connector. The microphone cable should have two RCA-type plugs on it: the high (± or hot) side of the microphone should plug into the left channel input and the common or low side of the microphone should plug into the right channel. The shield should connect to either of the outer shells of the plugs. If an unbalanced microphone is used, the shield and low side of the line should be connected together and plugged into the right channel jack.

7) Locate the two bare wire jumpers to the left of the connector on the mother board into which the new preamplifier card will be installed. The connectors and jumpers are identified in Figure 4-1. These jumpers allow AUX INPUTS 1 - 3 to be used as line inputs when no preamplifier is installed, and must be removed to activate the preamplifier. The jumpers may be clipped off close to the motherboard with a wire cutter.

8) Install Part No. 10-13853 preamplifier cards in the required locations on the mother board. Note the orientation of the card and make certain that the card correctly mates with the connector on the mother board.

9) If required, adjust the gain of the preamplifier by rotating the trimmer on the top edge of the card.

10) Reinstall the top cover, using all seven screws.

11) Connect a microphone to the XL-type connector, following the same wiring convention as for the other microphone(s) used with the 1620.

    WARNING: When the 1620 has been modified as above, the RCA-type connectors are still active. Do not connect a line level input to these jacks, since the preamplifier will be severely overloaded and heavy distortion will result. Additionally, if a microphone is simultaneously connected in parallel with a line input, which could happen if the RCA-type jacks are accidentally used at the same time as the XL-type connector, the microphone could be seriously damaged.

4.4 AUX 4 INPUT: BYPASSING MASTER GAIN CONTROLS

NOTE: THE FOLLOWING MODIFICATIONS INVOLVE SOLDERING IN THE 1620 CHASSIS AND SHOULD ONLY BE PERFORMED BY QUALIFIED TECHNICIANS. IMPROPER INSTALLATION MAY RESULT IN VOIDING THE UREI WARRANTY.

The Model 1620's microphone signals will appear at the tape outputs and effects loop, and will be affected by the house master and tone controls. In some circumstances, it may be desirable to keep the mic signal from appearing at these points so that it does not get processed along with the music and is not recorded on tape.

With this modification, the mic connected to AUX 4 will be unaffected by the master gain control. Its level will be controlled only by the AUX 4 input control. Note, however, that if this modification is done, it is advisable to internally disconnect the line level inputs AUX A - E from the AUX 4 control, since bypassing the extra tone control and master gain amplification stages will cause the AUX 4 control to be out of phase with the other AUX controls. If the same line input signal is inadvertently fed from AUX 4 and another AUX control at the same time, the signal will partially or totally cancel.

To make this modification:

1) Remove the seven screws fastening the top cover of the 1620 to the chassis, and remove the cover.

2) Remove the seven screws fastening the bottom cover of the 1620 to the chassis, and remove the cover.

3) Locate R27 and R28 on the motherboard (refer to Fig. 4-1).

4) The resistor numbers are printed towards the front edge of the motherboard. Carefully unsolder one end of each resistor (R35 and R36) on the unnumbered side and lift the ends from the motherboard.

5) Cut two 150 mm (6 in) lengths of insulated hook-up wire.

6) Solder one of these wires to the free end of R27. Similarly, connect the other wire to the free end of R28.

7) Solder the free end of the R28 wire to the motherboard hole labelled "MIC POST." The free end of the R27 wire is to be soldered to the free hole next to it. Refer to Figure 4-1.

8) (Optional but recommended) Locate the front panel circuit board containing the AUX 4/MIC selector switch, and unplug the Molex connector attached to the ribbon cable. This disables all line level inputs feeding the AUX 4 position.

9) Make sure all connections are secure, and reinstall the top and bottom covers, using all 14 screws.

4.5 TONE CONTROL BYPASS

NOTE: THE FOLLOWING MODIFICATIONS INVOLVE SOLDERING IN THE 1620 CHASSIS AND SHOULD ONLY BE PERFORMED BY QUALIFIED TECHNICIANS. IMPROPER INSTALLATION MAY RESULT IN VOIDING THE UREI WARRANTY.

In some circumstances, it may be desireable to defeat the tone controls. To disable these controls:

1) Remove the seven screws fastening the top cover of the 1620 to the chassis, and remove the cover.

2) Locate the tone control circuit board on the right side of the front panel. While this modification may be made with the circuit board installed in the 1620, it is recommended that the board be removed from the front panel by removing the tone control knobs and the nuts holding the controls to the front panel.

   WARNING: If the circuit board is not removed, take extreme care in soldering, as there is little space and damage can easily result.

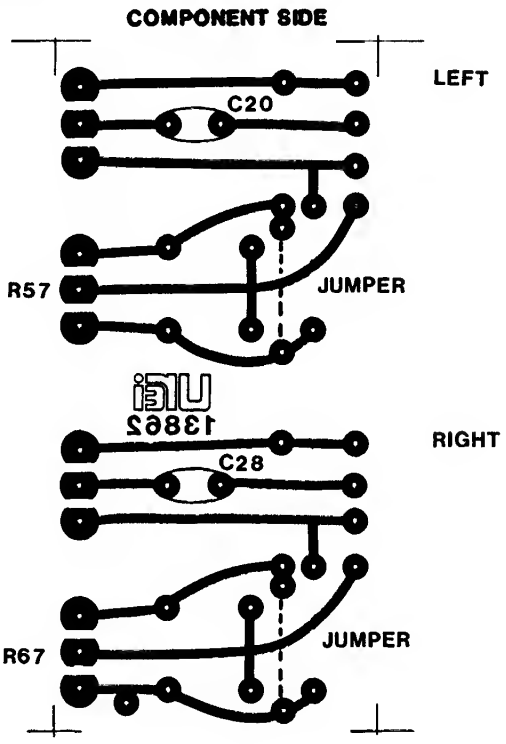

FIGURE 4-3. Tone Control Board

3) Remove the two 820 pF capacitors (C20 and C28) from the circuit board (refer to Fig. 4-3.) Removal of these capacitors will disable the high frequency sections of the equalizers.

4) Cut two bare wire jumpers approximately 20 mm (3/4 in) long and form them into "U" shapes.

5) Solder the jumpers onto the circuit board, bypassing potentiometers R57 and R67 (refer to Fig. 4-3). These jumpers disable the low frequency sections.

6) Reinstall the circuit board on the front panel, and replace the knobs on the control shafts.

7) Replace the top cover, using all seven screws.

SECTION V
MAINTENANCE

5.1 GENERAL

The Model 1620 is an all solid state unit, ruggedly constructed with the highest quality components. As such, it should provide years of trouble free use with normal care. All parts used are conservatively rated for their application, and workmanship meets UREI's rigid standards.

NO SPECIAL PREVENTIVE MAINTENANCE IS REQUIRED, AND (WITH THE EXCEPTION OF THE MICROPHONE GAIN TRIM) THERE ARE NO INTERNAL SERVICE ADJUSTMENTS.

5.2 REPAIRS AND WARRANTY

This product is warranted by the factory to the original purchaser against defects in material and workmanship for one year after initial purchase. This limited warranty must be activated at the time of purchase by returning the registry portion of the Warranty Card to the factory. Should a malfunction ever occur, the dealer from whom the unit was purchased will be glad to handle return for factory repair.

If it is not convenient to return the unit to the dealer, please call or write the factory for a Return Authorization number. All products returned to the factory must be accompanied by a Return Authorization number, and must be shipped prepaid. COD shipments will not be accepted.

For prompt service, ship the unit to the factory with the RA number marked on the shipping label. Be sure that it is well packed in a sturdy carton, with shock-absorbing material such as urethane foam, styrofoam pellets or "bubble pack" completely filling the remaining space. Pay particular attention to protecting the controls, switches, etc. Shipping damage caused by inadequate packing is not covered by the UREI warranty. Tape a note to the top of the unit describing the malfunction, and instructions for returning the product. We will pay one-way return surface shipping costs on any repair covered under the terms of this warranty.

Field repairs are not normally authorized during the warranty period, and repair attempts by unqualified personnel may invalidate the warranty.

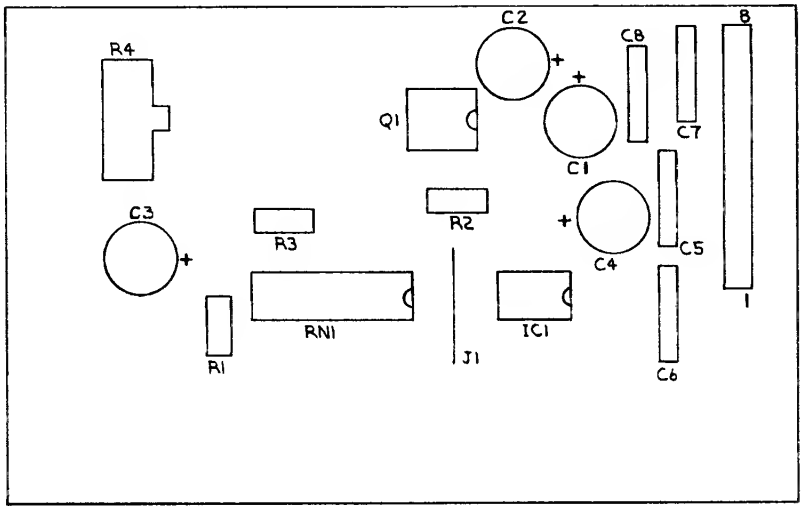

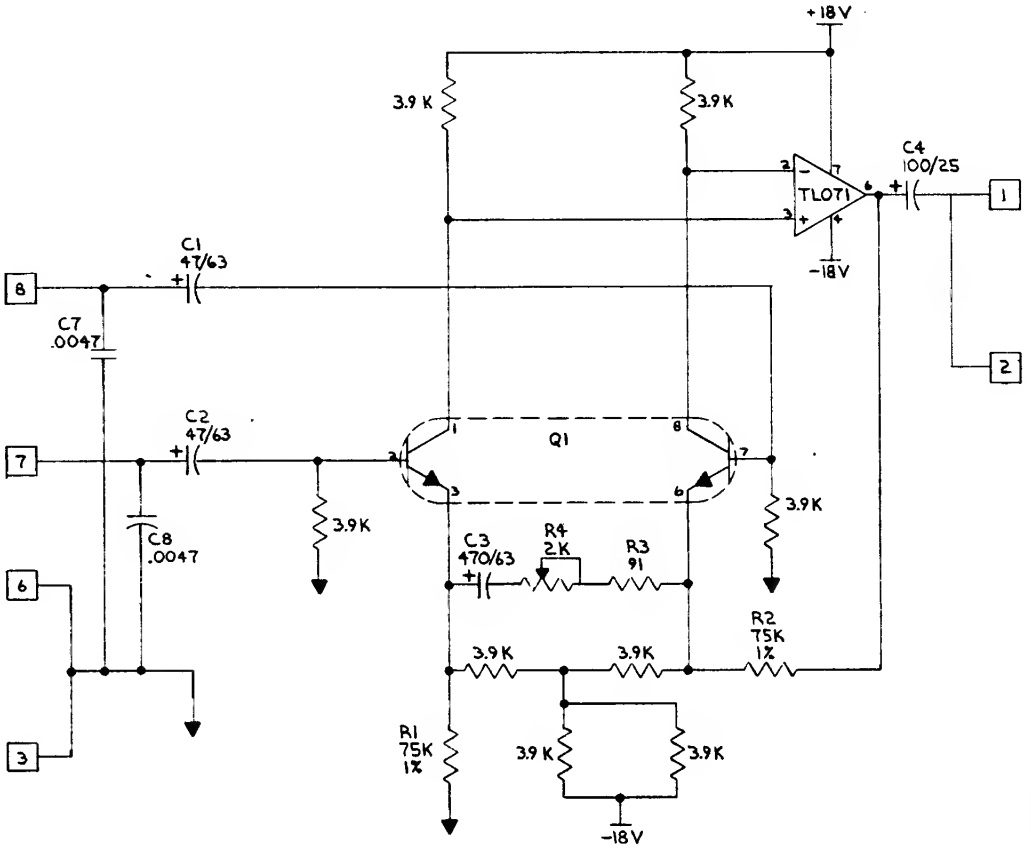

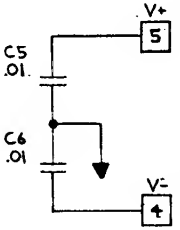

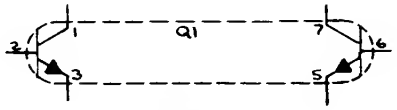

DETAIL 3

3 Q1 WAS PREVIOUSLY IN 8 PIN ROUND PACKAGE. PINOUT SHOWN IN DETAIL.
2) TRANSISTORS LM394 DUAL
1) ALL 3.9K RESISTORS IN R-PACK
NOTES:

REV A: REVD NOTE 2 PER ECO-0002
REVISIONS

UNITED RECORDING ELECTRONICS INDUSTRIES	SCHEM DIAG/COMP L.O. MIC PREAMP 1621 REV A
DD-176 DEPARTMENT	DATE 3/25/87 ISSUE 15427 A
LOS ANGELES CALIFORNIA	CHECKED APPROVED

BISHOP GRAPHICS/ACCUPRESS

PHONO PREAMPLIFIER

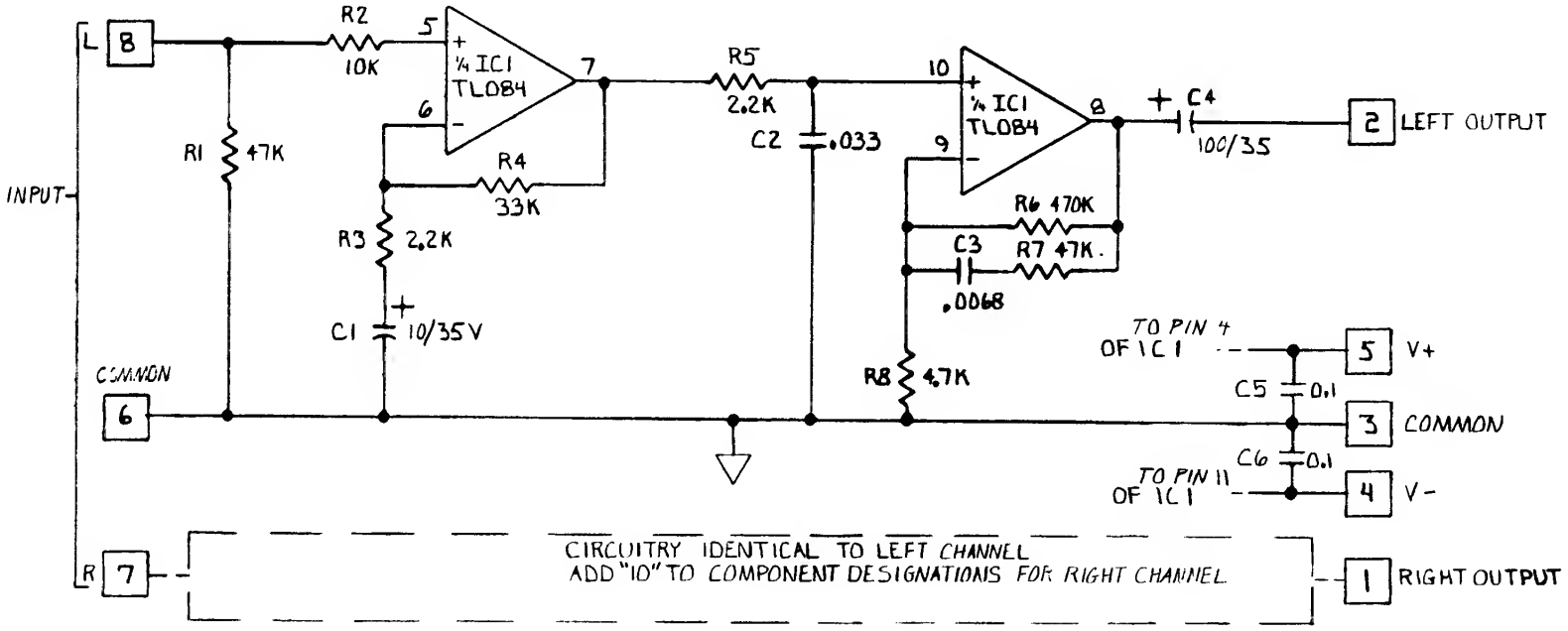

NOTES: UNLESS OTHERWISE SPECIFIED

1. RESISTOR VALUES ARE IN OHMS ±5% ½W
2. CAPACITOR VALUES ARE IN MICROFARADS
3. ⏚ INDICATES CIRCUIT GROUND
4. □ INDICATES TERMINATION AT FEMALE CONNECTOR

REV. B PER ECO-001
9-2-82 R.P.M.
REVISIONS

UNITED RECORDING ELECTRONICS INDUSTRIES
DEPARTMENT
LOS ANGELES CALIFORNIA

SCHEMATIC
PHONO PREAMPLIFIER

MODEL 1622
DATE 6-25-82
ISSUE
CHECKED GK
APPROVED
B13882B

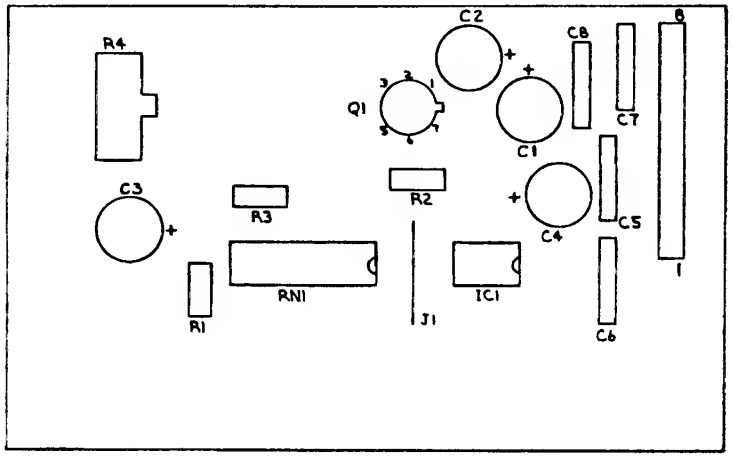

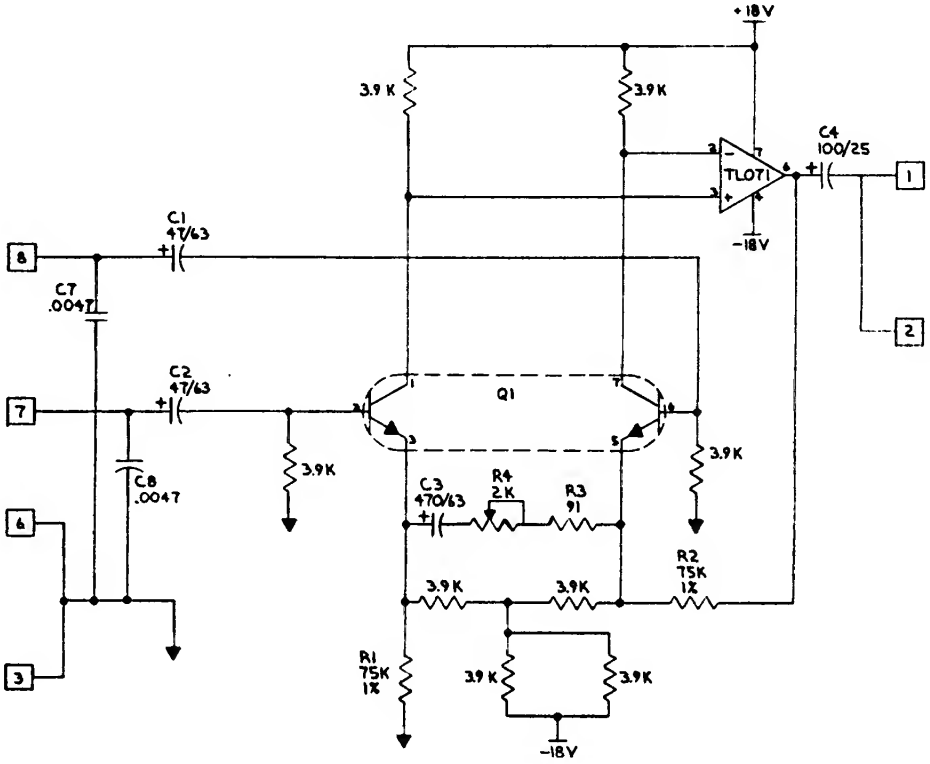

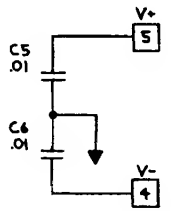

NOTES:
1) ALL 3.9K RESISTORS IN R-PACK
2) TRANSISTORS LM394 DUAL IN 6 PIN ROUND PACK

UNITED RECORDING ELECTRONICS INDUSTRIES	SCHEM DIAG/COMP L.O. MIC PREAMP 1621 REV A	
DD-176	DATE 3/25/87	ISSUE 15427
LOS ANGELES CALIFORNIA	CHECKED	APPROVED

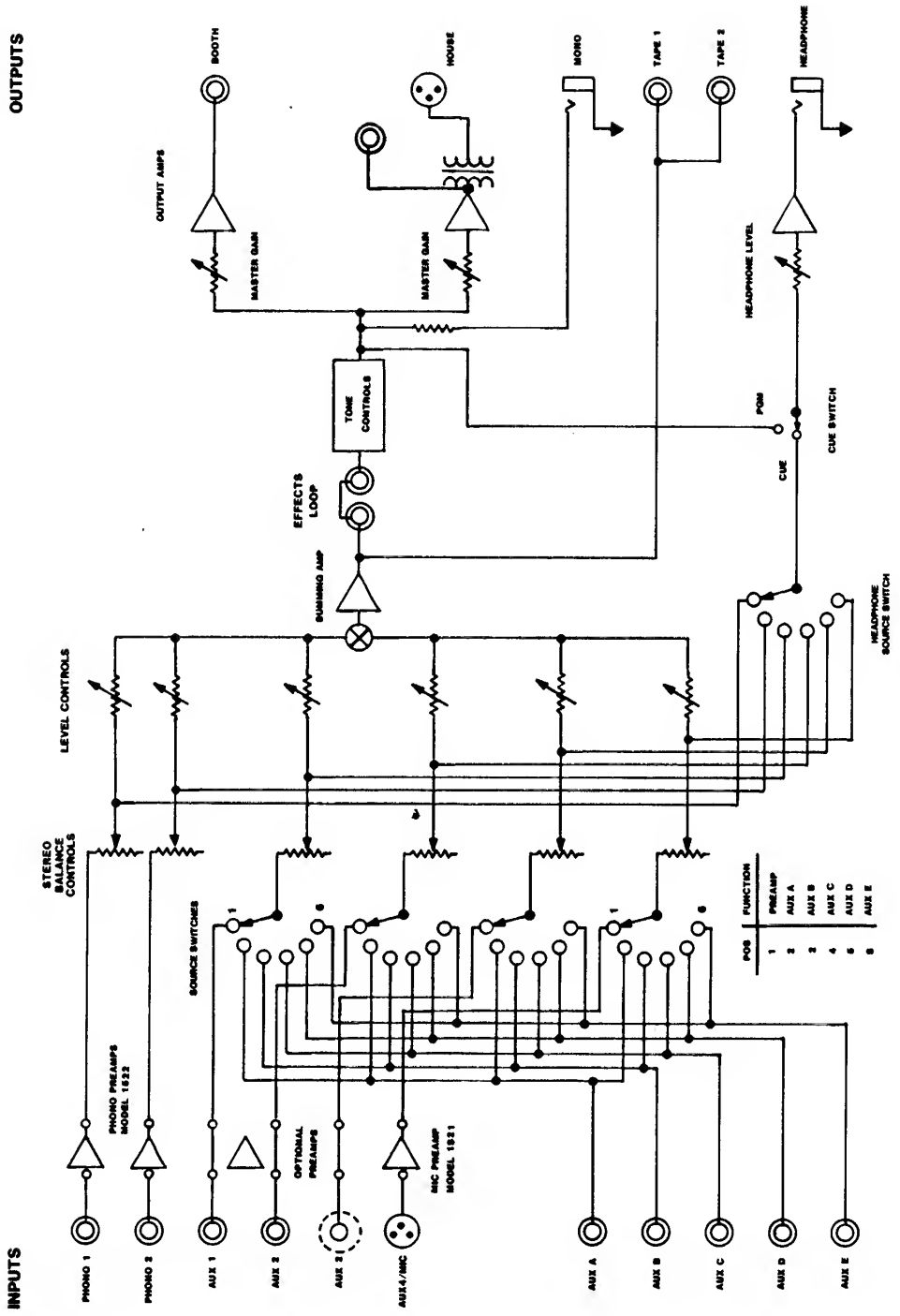
MODEL 1620 BLOCK DIAGRAM
ONE CHANNEL SHOWN
OUTPUTS
INPUTS
BOOTH
HOUSE
MONO
TAPE 1
TAPE 2
HEADPHONE
OUTPUT AMPS
MASTER GAIN
HEADPHONE LEVEL
TONE CONTROLS
PGM
CUE
CUE SWITCH
EFFECTS LOOP
SUMMING AMP
HEADPHONE SOURCE SWITCH
LEVEL CONTROLS
STEREO BALANCE CONTROLS
SOURCE SWITCHES
FUNCTION
POS
PREAMP
AUX A
AUX B
AUX C
AUX D
AUX E
PHONO PREAMPS MODEL 1622
OPTIONAL PREAMPS
MIC PREAMP MODEL 1621
PHONO 1
PHONO 2
AUX 1
AUX 2
AUX 3
AUX4/MIC
AUX A
AUX B
AUX C
AUX D
AUX E

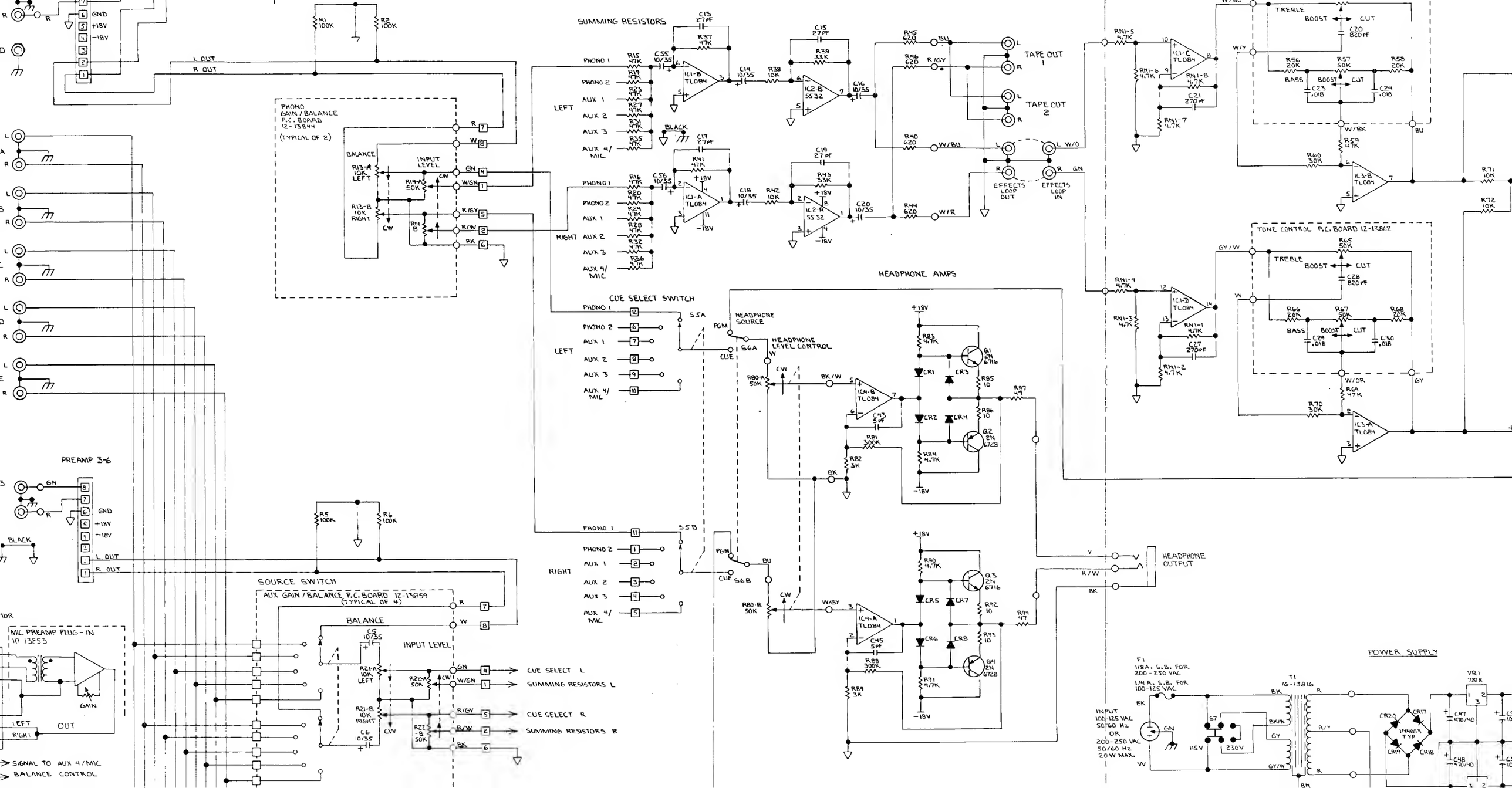
SUMMING RESISTORS
PHONO 1
PHONO 2
AUX 1
AUX 2
AUX 3
AUX 4/ MIC
LEFT
RIGHT
TAPE OUT 1
TAPE OUT 2
EFFECTS LOOP OUT
EFFECTS LOOP IN
TREBLE
BOOST
CUT
BASS
TONE CONTROL P.C. BOARD 12-13862
HEADPHONE AMPS
HEADPHONE SOURCE
HEADPHONE LEVEL CONTROL
HEADPHONE OUTPUT
CUE SELECT SWITCH
PREAMP 3-6
SOURCE SWITCH
AUX GAIN / BALANCE P.C. BOARD 12-13859 (TYPICAL OF 4)
PHONO GAIN / BALANCE P.C. BOARD 12-13844 (TYPICAL OF 2)
BALANCE
INPUT LEVEL
MIC PREAMP PLUG-IN 10 13553
GAIN
SIGNAL TO AUX 4/MIC
BALANCE CONTROL
CUE SELECT L
SUMMING RESISTORS L
CUE SELECT R
SUMMING RESISTORS R
L OUT
R OUT
POWER SUPPLY
INPUT 100-125 VAC 50/60 Hz OR 200-250 VAC 50/60 Hz 20 W MAX.
115V
230V

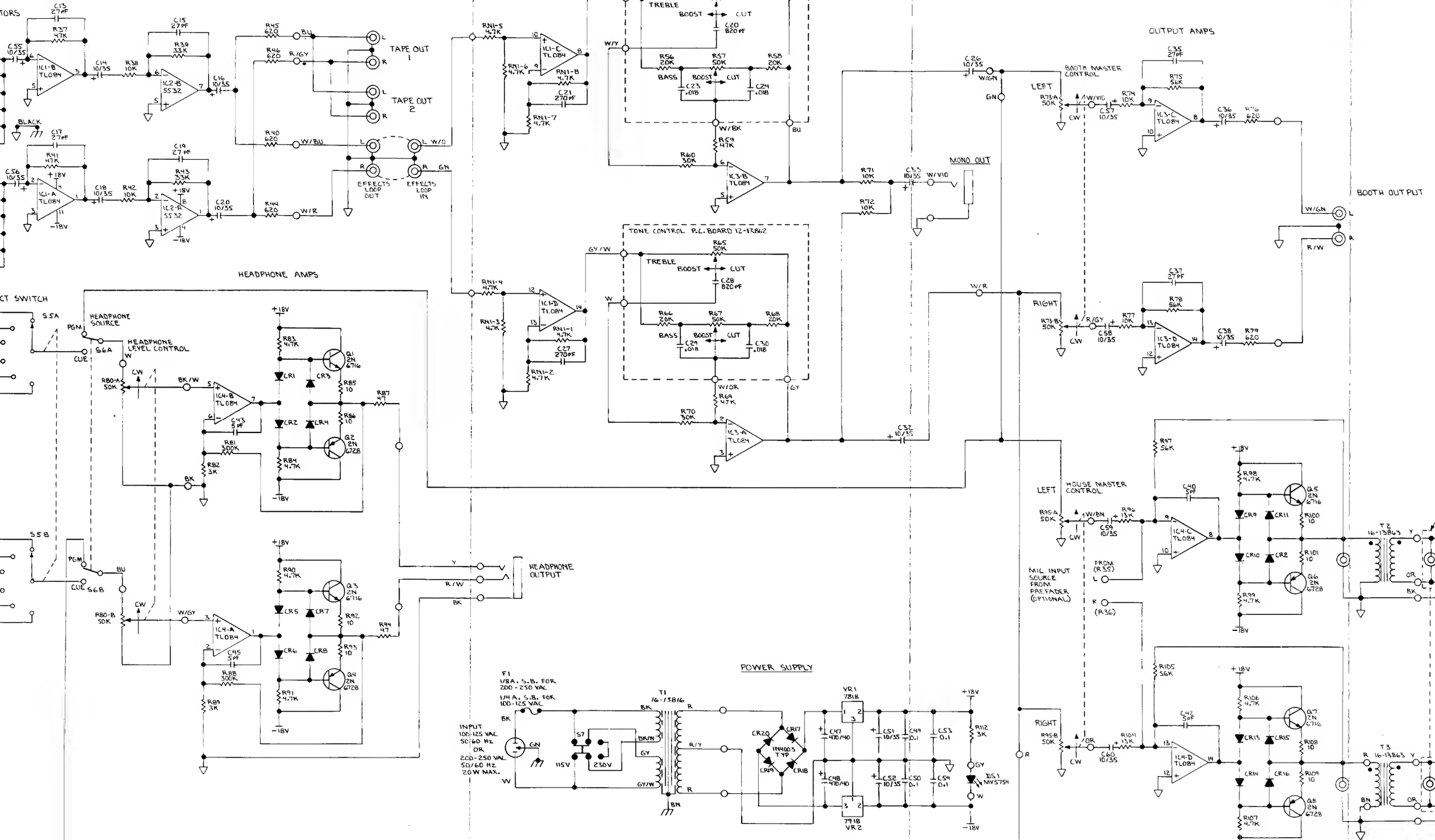

TAPE OUT 1
TAPE OUT 2
EFFECTS LOOP OUT
EFFECTS LOOP IN
TREBLE
BOOST
CUT
BASS
OUTPUT AMPS
BOOTH MASTER CONTROL
LEFT
RIGHT
MONO OUT
BOOTH OUTPUT
TONE CONTROL P.C. BOARD 12-13862
HEADPHONE AMPS
HEADPHONE SOURCE
HEADPHONE LEVEL CONTROL
HEADPHONE OUTPUT
HOUSE MASTER CONTROL
MIC INPUT SOURCE FROM PREFADER (OPTIONAL)
FROM (R35)
(R36)
POWER SUPPLY
F1 1/8A. S.B. FOR 200-250 VAC
1/4 A. S.B. FOR 100-125 VAC
INPUT 100-125 VAC 50/60 Hz OR 200-250 VAC 50/60 Hz 20W MAX.
T1 16-13816
VR1 7818
VR2 7918
1N4003 TYP
DS1 MV5754
T2 16-13863
T3 16-13863

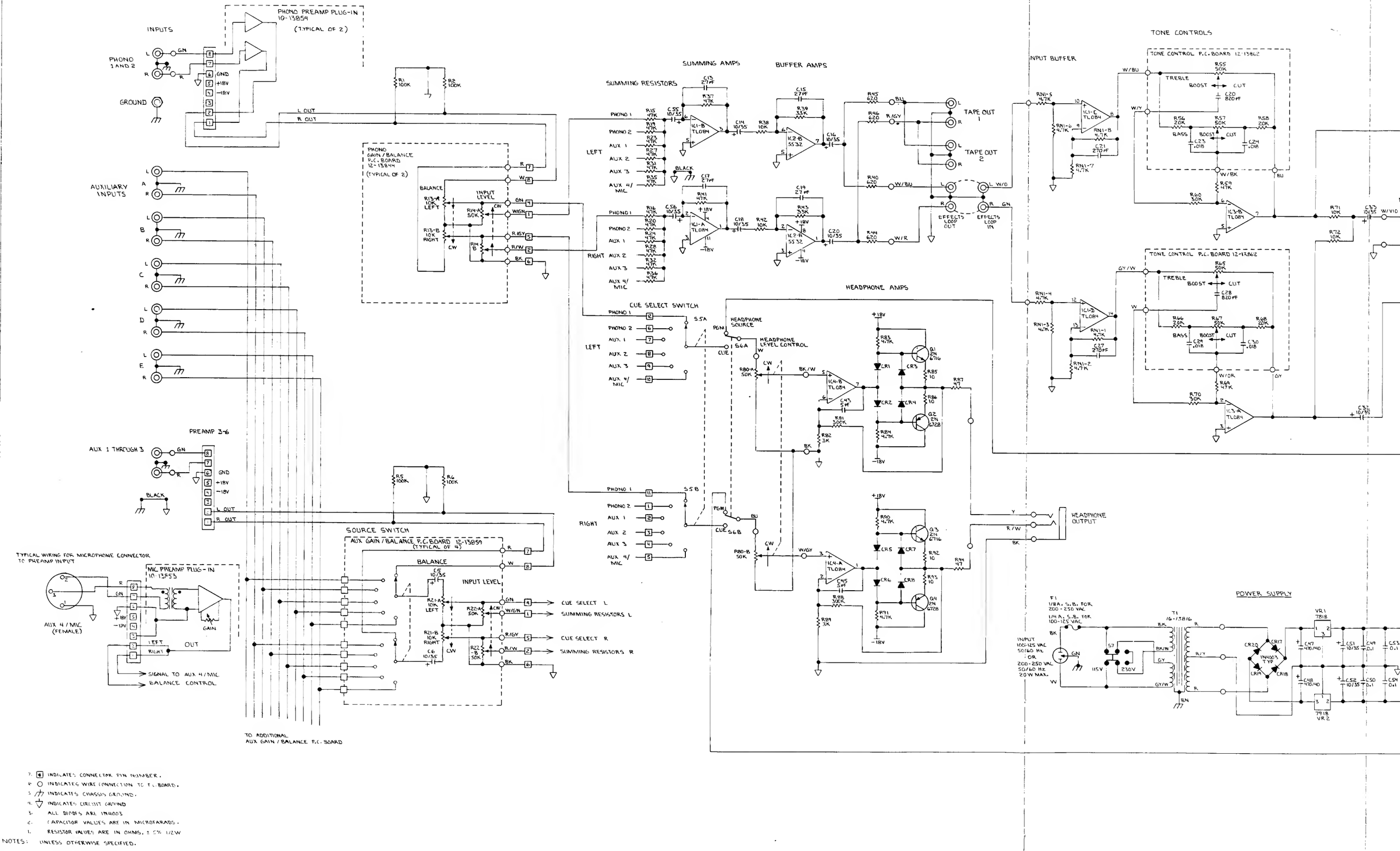

7. ⊡ INDICATES CONNECTOR PIN NUMBER.
6. ○ INDICATES WIRE CONNECTION TO P.C. BOARD.
5. ⏚ INDICATES CHASSIS GROUND.
4. ▽ INDICATES CIRCUIT GROUND
3. ALL DIODES ARE 1N4003
2. CAPACITOR VALUES ARE IN MICROFARADS.
1. RESISTOR VALUES ARE IN OHMS, ± 5% 1/2W

NOTES: UNLESS OTHERWISE SPECIFIED.

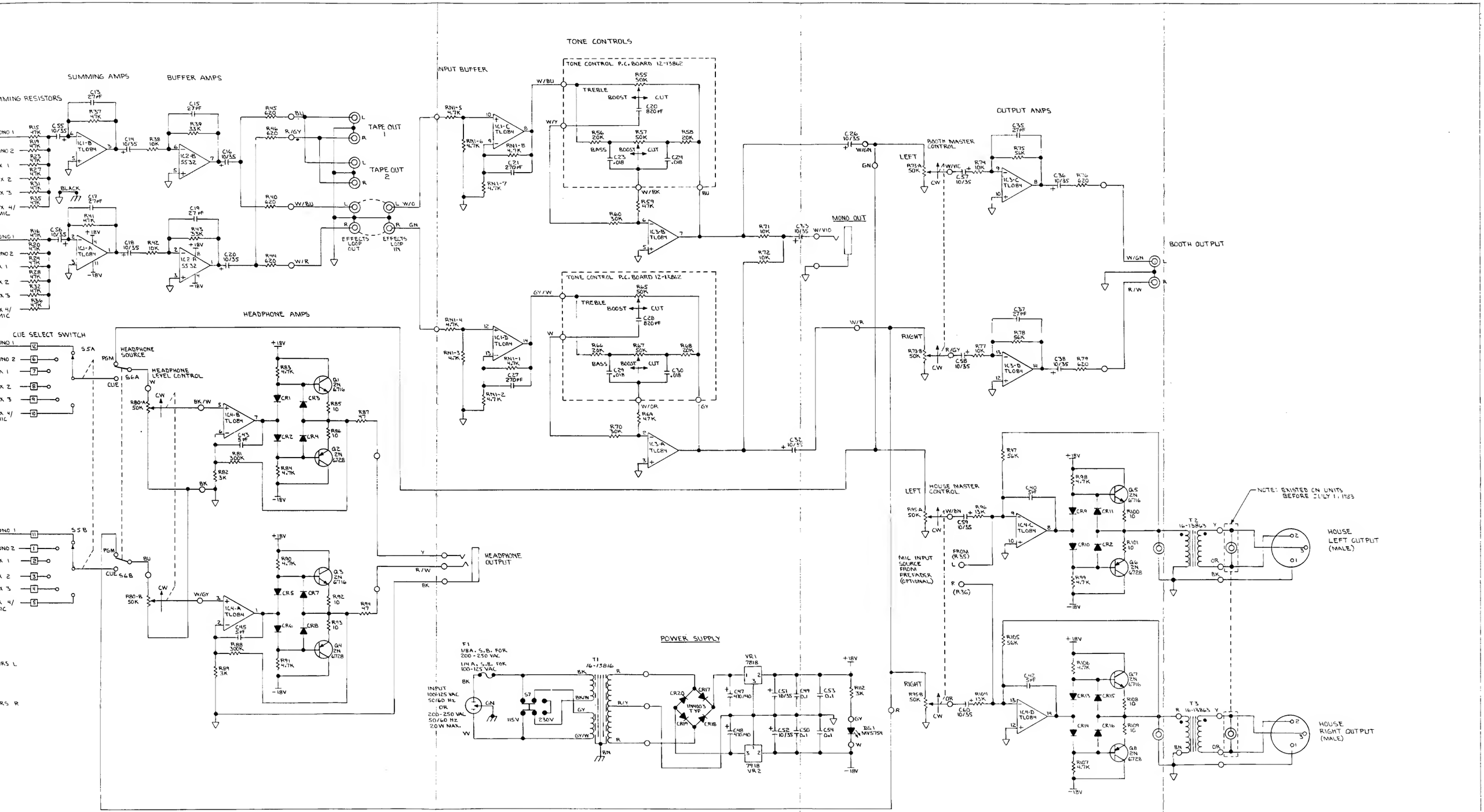
SUMMING AMPS
BUFFER AMPS
INPUT BUFFER
TONE CONTROLS
TONE CONTROL P.C. BOARD 12-13862
OUTPUT AMPS
BOOTH MASTER CONTROL
BOOTH OUTPUT
MONO OUT
TAPE OUT 1
TAPE OUT 2
EFFECTS LOOP OUT
EFFECTS LOOP IN
HEADPHONE AMPS
CUE SELECT SWITCH
HEADPHONE SOURCE
HEADPHONE LEVEL CONTROL
HEADPHONE OUTPUT
POWER SUPPLY
INPUT 100-125 VAC 50/60 Hz OR 200-250 VAC 50/60 Hz 20W MAX.
HOUSE MASTER CONTROL
MIC INPUT SOURCE FROM PREFADER (OPTIONAL)
NOTE: EXISTED ON UNITS BEFORE JULY 1, 1983
HOUSE LEFT OUTPUT (MALE)
HOUSE RIGHT OUTPUT (MALE)
SCHEMATIC
SIZE R
MODEL NO 1620
DRAWING NO. 13884.5
DATE 7-27-82
DR. BY R. P. MARIN